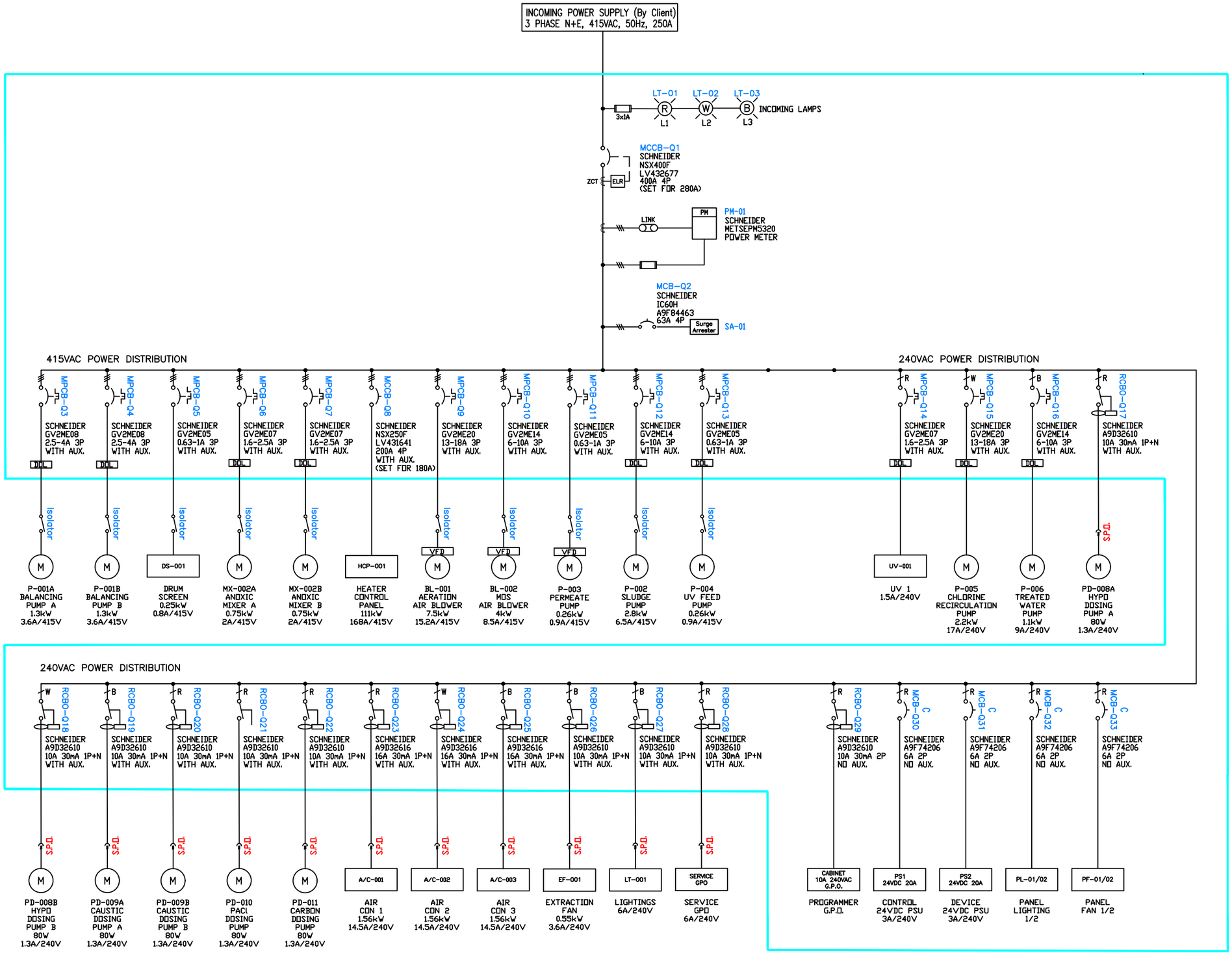

FOR REVIEW

demem akwa

SCALES

ORIG. SIZE A3

REV	DESCRIPTION	DATE	DWN	APP
A	FOR REVIEW	02.01.22	JC	DK

REVISIONS

CHECKED BY	
NAME:	
DATE:	
SIGNATURE:	
-	
FOR CONSTRUCTION	
NAME:	
DATE:	
SIGNATURE:	
RPEQ No.	

THIS DRAWING REMAINS THE PROPERTY OF AKWAWORX
REPRODUCTION OR DISSEMINATION OF ANY KIND IN ANY FORMAT IS
STRICTLY FORBIDDEN WITHOUT AUTHORISED APPROVAL

PROJECT & DRAWING TITLE

JQU-0226 - SELWYN
SNOW RESORT STP
MAIN SWITH BOARD
SINGLE LINE DIAGRAM

DRAWING NUMBER

DEM-JQU-0226-4-XXXX-SHT 1 OF 1

REVISION A

LAST MODIFIED:1/12/2022 10:23 PM CAD REF:C:\USERS\JOANNEMENG\DOCUMENTS\PROJECTS\AKWA WORX\SELWYN STP\ELECTRICAL\SELWYN_STP_CONTAINER 1 MSB_ELECTRICAL.DWG